CATALOGUE

EXHO

DEFEAT THE SHOCKS

2023

DEFEAT THE SHOCK DEFEAT THE SHOCK DEFEAT THE SHOCK

EXSHO
DEFEAT THE SHOCKS

INDEX

06 _COMPANY

08 _TECHNOLOGY

11 _MTB
- 12 _ARES
- 13 _FIX
- 15 _CASTOS
- 15 _CASTOS-15
- 16 _RISE
- 16 _ZEUS

19 _FATBIKE
- 21 _SINGLE/DOUBLE CROWN
- 22 _DASH
- 23 _STRONG
- 24 _ALSTON
- 24 _ALSTON-15
- 25 _STRIDE
- 25 _TARZAN
- 26 _EXPLORE
- 26 _STRONG-DH
- 27 _ALSTON-DH
- 27 _COWBOY

29 _DOWNHILL
- 30 _ARES-DH
- 31 _CASTOS-DH
- 31 _CASTOS-15DH

33 _URABAN
- 38 _RAY-650
- 38 _RAY-630

36 _PRODUCT SPECIFICATION

COMPANY

玩家精神 无所畏惧
EXSHO集合了来自中国台湾，意大利，中国大陆等国际级团队倾心全力打造的一个高端前叉品牌！期许成为车迷们最亲密的战友，更是进入竞赛殿堂的首选品牌！

硬实力生产技术
2020独资成立的科美运动有限公司，联合专注生产制造自行车避震前叉近10年的完美车业公司，集合丰沛的研发、营销、自动化、智能化、多元化的生产企业经验，EXSHO过人的硬实力是品牌梁柱的基础。除了基础坚实，我们还持续投入开发，不论是挑战高难度竞赛项目，让玩家们尽兴、信赖高端又独具技术力的商品，还是一般日常出行舒适、耐用、可靠又好保养的商品，EXSHO都能满足。广大车友的各种需求与服务EXSHO下足够功夫从不含糊！

软实力服务到位
企业打造百年之路始于足下，为了能零距离服务客户，让消费者感受高端产品带来的美好体验，紧接着于2021年底在中国华东地区成立了易硕运动科技（昆山）有限公司，EXSHO将带着诚信、感恩、学习、创新、服务、共赢的价值观，秉承“玩家精神“，让人人爱上绿色骑行，让生活更完美！这一奋斗目标，与一群精干的技术管理团队一起，打造高端前叉打下属于玩家跟EXSHO的一片天地。

TECHNOLOGY

气压避震前叉大量使用7075铝合金材料（轻量化航空级），开放式的避震结构，更便于终端消费者进行保养维护；镁合金外管使用轴承式滑套，让前叉在运动过程中，更加顺畅。

开放式的避震结构分为正气室与负气室，前叉在骑行时，下压过程中，前段灵敏度高，舒适度好；后段支撑力高，防止触底；而前叉在快速回弹时，也不会产生触底的声响。在前叉弹性曲线上表现为完美的抛物线状态，而普通前叉弹性曲线呈线性状态。

铝肩与内管，立管组合时，采用半自动化进行压合，作业过程中，压力力值会在机台上显示，如果产品在压合过程中超出下限值、上限值，机器会自动报警，杜绝不良品流入下一道工序，确保产品品质。成品在组装过程中，对前叉锁死功能与弹性系数采用专业机器检测，力求更精准，确保锁死功能正常，弹性系数前叉钢性符合客人要求。

01 轻量化镁合金外管，CNC加工滑套尺寸，配合轴承式滑套，前叉避震更顺畅。

02 桶轴采用7075航空铝材，中间空心，减重；螺帽有标识扭力要求，以免骑行者用力过猛损伤牙纹。

03 锁死结构与气压避震结构是科美独立开发的新技术，有完整知识产权，受权专利号（202210043072.9/202210041998.4/202210043097.9）

04 轻量化、高强度铝合金7075材质内管，内管颜色可定制。

05 高强度铝合金固定座，独特的意大利设计旋纽外观造型。

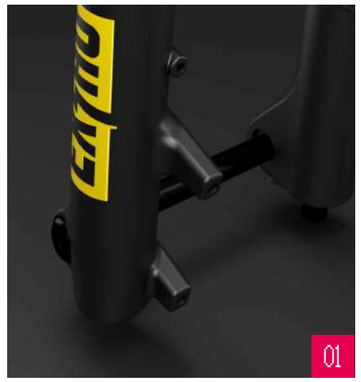

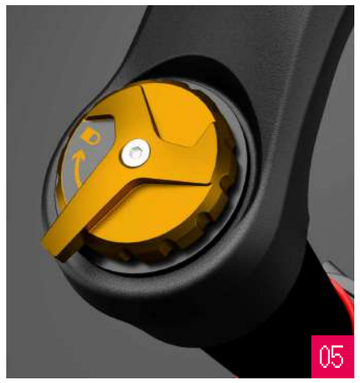

MTB

总喜欢在周末带着爱车出发

风从耳旁吹过

沙砾路的粗糙质感

令血液为之一振

优秀的避震效果令我心无旁骛

尽情尽兴随心出发

放肆造

这一份托底般的信赖

你不想试试？

EXSHO
DEFEAT THE SHOCKS

ARES

镁合金外腿，锻造铝肩；轻量化航空级铝内管高强度36内管；轴承式滑套，提升内管顺畅度，新升级气压避震系统，可选功能齐全；搭配2.8轮胎，轻松自如应对各种复杂路况，易维护。

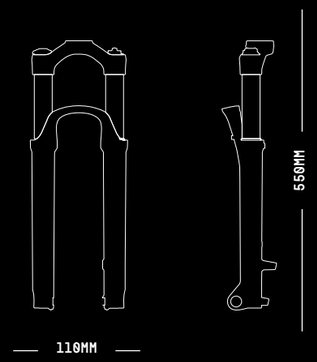

MODEL	ARES			
	A-TNL	TNL-R	A-RL	AL-R
STEERER	Aluminium 7075, ϕ30(39.8)*28.6			
CROWN PITCH	Aluminium P145mm			
CROWN	Aluminium			
STANCHION	Aluminium-ϕ36mm hard Anodize			
CASTING	Magnesium 110*ϕ15mm,Thru Axle			
SPRING	Air			
WHEEL SIZE	27.5+" 29+"			
TRAVEL	100/120/140/160mm			
BRAKE TYPE	Disc Brake			

A Air
R Rebound
RL Remote Lock-out
TNL Hydraulic Lock-out

FIX

锻造铝肩结合镁合金外腿；轻量化航空级铝内管高强度34内管；新升级气压避震系统，轴承式滑套，内管顺畅无敌；可选功能齐全，搭配3.0轮胎，轻松自如应对各种复杂路况，易维护。

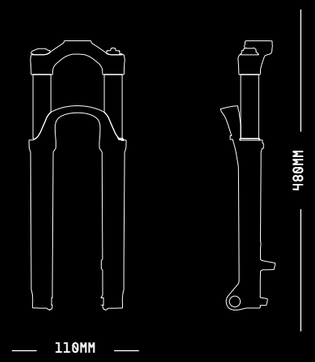

MODEL	FIX			
	A-TNL	A-TNL-R	A-RL	A-RL-R
STEERER	Aluminium 7075, ϕ30(39.8)*28.6			
CROWN PITCH	P145mm			
CROWN	Aluminium			
STANCHION	Aluminium-ϕ34mm hard Anodize			
CASTING	Magnesium 110*15mm, Thru Axle			
SPRING	Air			
WHEEL SIZE	20" 24"			
TRAVEL	80/100/120mm			
BRAKE TYPE	Disc Brake			

A Air
R Rebound
RL Remote Lock-out
TNL Hydraulic Lock-out

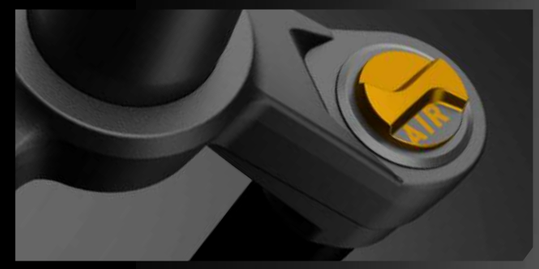

CASTOS

适配高性能山地自行车，配2.1轮胎；锻造铝肩+镁合金外腿，直径32，高强度轻量化航空级铝内管，新升级气压避震系统，轴承式滑套，内管顺畅无比；可选弹簧叉（使用高碳钢内管），可选功能齐全；轻松驾驭各种复杂路况，易维护。

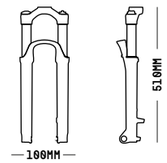

MODEL	CASTOS						
	A-TNL	A-TNL-R	A-RL	A-RL-R	ML-P	TNL-P	RL-P
STEERER	Aluminium 7075/Steel Φ30(39.8)*28.6						
CROWN PITCH	P130mm						
CROWN	Aluminium						
STANCHION	Aluminium-Φ32mm hard Anodize				Steel-Φ32mm CP/QPQ		
CASTING	Magnesium open dropout 100*Φ9.8mm						
SPRING	Air				Coil w/P		
WHEEL SIZE	27.5" 29"						
TRAVEL	100/120mm						
BRAKE TYPE	Disc Brake						

A Air
R Rebound
P Preload Adjuster

RL Remote Lock-out
TNL Hydraulic Lock-out
ML Mechanical Lock-out

CASTOS-15

高性能山地车最佳拍档，镁合金外腿+锻造铝肩；直径32，高强度轻量化航空级铝内管；新升级气压避震系统，轴承式滑套，极大提升内管顺畅度；可选弹簧叉（使用高碳钢内管），可选功能齐全，易维护，驾驭各种复杂路况不在话下。

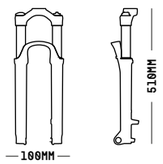

MODEL	CASTOS-15						
	A-TNL	A-TNL-R	A-RL	A-RL-R	ML-P	TNL-P	RL-P
STEERER	Aluminium 7075/Steel Φ30(39.8)*28.6						
CROWN PITCH	P130mm						
CROWN	Aluminium						
STANCHION	Aluminium-Φ32mm hard Anodize				Steel-Φ32mm CP/QPQ		
CASTING	Magnesium 100*Φ15mm, Thru Axle						
SPRING	Air				Coil w/P		
WHEEL SIZE	27.5" 29"						
TRAVEL	100/120mm						
BRAKE TYPE	Disc Brake						

A Air
R Rebound
P Preload Adjuster

RL Remote Lock-out
TNL Hydraulic Lock-out
ML Mechanical Lock-out

MTB

RISE

高性能山地车最佳拍档，镁合金外腿+锻造铝肩；直径32，高强度轻量化航空级铝内管；新升级气压避震系统，轴承式滑套，极大提升内管顺畅度；可选弹簧叉（使用高碳钢内管），可选功能齐全，易维护，驾驭各种复杂路况不在话下。

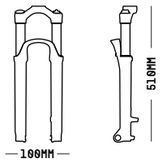

MODEL	RISE			
	A-TNL	A-TNL-R	A-RL	A-RL-R
STEERER	Aluminium 7075/steel Φ30(39.8)*28.6			
CROWN PITCH	P130mm			
CROWN	Aluminium			
STANCHION	Aluminium-Φ34mm hard Anodize			
CASTING	Magnesium open dropout100*Φ9.8mm			
SPRING	Air			
WHEEL SIZE	27.5" 29"			
TRAVEL	120mm			
BRAKE TYPE	Disc Brake			

A Air
R Rebound

RL Remote Lock-out
TNL Hydraulic Lock-out

ZEUS

高性能山地车最佳拍档，铝合金外腿+锻造铝肩；直径32，高强度高碳钢QPQ内管；一体式气棒，方便入门级车车手维护，可选功能齐全，易维护，驾驭各种复杂路况不在话下

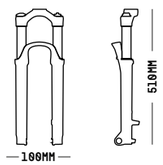

MODEL	ZEUS						
	A-TNL	A-TNL-R	A-RL	A-RL-R	ML-P	TNL-P	RL-P
STEERER	Aluminium/Steel Φ30(39.8)*28.6						
CROWN PITCH	P130mm						
CROWN	Aluminium						
STANCHION	Aluminium-Φ32mm hard Anodize				Steel-Φ32mm CP/QPQ		
CASTING	Magnesium open dropout 100*Φ9.8mm				Aluminium open dropout 100*Φ9.8mm		
SPRING	Air				Coil w/P		
WHEEL SIZE	26" 27.5" 29"						
TRAVEL	100/120mm						
BRAKE TYPE	Disc Brake						

A Air
R Rebound
P Preload Adjuster

RL Remote Lock-out
TNL Hydraulic Lock-out
ML Mechanical Lock-out

FATBIKE

新换的前叉令人眼前一亮

迫不及待想去狠狠体验一把

果然各种高难度动作顺畅无比

安心飞包、腾跃、俯冲

安静、灵敏、反应迅速

它为山林而生

它令我自信面对各种路况

放肆野骑，畅享骑行乐趣

你也可以

Fatbike雪地车4.0轮，可搭配前驱电机。使用中，对前叉重量有要求的客户，可选择STRONG-DH与ALSTON-DH前叉，空气压缩弹簧，（铝内管，立管）7075航空铝材，更轻量化，STRONG-DH使用镁合金外管。

EXHO
DEFEAT THE SHOCKS

FATBIKE

SINGLE CROWN

雪地车单肩倒置前叉，42铝合金外管+34铝合金内管，行程最大150；开档规格，110/135/150 桶轴规格：15/20；有线性弹簧与空气弹簧两个版本，空气弹簧高强度铝合金内管，轻量化；油簧叉，高碳钢内管，性能稳定；油压锁死/机械锁死/弹簧可调/线控锁死，均可自由选择。

DOUBLE CROWN

雪地车双肩倒置前叉，行程大，强度高，装配美观；42铝合金外管+34铝合金内管，内管颜色可以定制；开档规格：110/135/150 桶轴规格：15与20；托板造型独特， 拥有有线性弹簧与空气弹簧两个版本，油压锁死与回弹可调 。

DASH

种类齐全适用于高性能山地越野和电助力山地自行车的倒叉前叉；锻造铝肩+航空级铝合金叉腿(42)，高强度内管（34），减震性能好；路面状况反映灵敏，支持个性化定制化；可选配110-135-150三种开档，桶轴选配15与20。

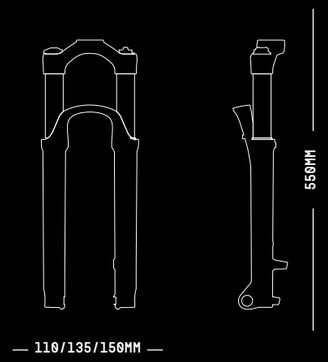

MODEL	DASH					
	A-TNL	A-TNL-R	A-R	A-A	TNL-R	TNL
STEERER	Aluminium 7075, Φ30(39.8)*28.6					
CROWN PITCH	P145/171/185mm					
CROWN	Aluminium					
STANCHION	Aluminium-Φ34mm hard Anodize					
CASTING	Aluminium 110/135/150mm*Φ15/20mm Thru Axle					
SPRING	Air				Coil	
WHEEL SIZE	20" 24" 26" 27.5" 29"					
TRAVEL	80/100/120/140/160mm					
BRAKE TYPE	Disc Brake (160mm-180mm)					

A Air
R Rebound
TNL Hydraulic Lock-out

STRONG

雪地车前叉，锻造铝肩搭配4.0轮胖胎，减震性能优越；选配气叉与弹簧叉，气叉配直径34，高强度，轻量化航空级铝内管；弹簧叉配高碳钢34内管，机械/油压/线控均可自由选配。

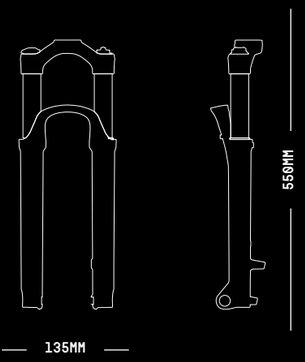

MODEL	STRONG				
	A-TNL	A-RL	ML-P	TNL-P	P
STEERER	Aluminium 7075, Φ30(39.8)*28.6				
CROWN PITCH	P171mm				
CROWN	Aluminium				
STANCHION	Aluminium-Φ34mm hard Anodize		Steel-Φ34mm CP/QPQ		
CASTING	Magnesium open dropout 135*Φ9.8mm		Aluminium open dropout 135*Φ9.8mm		
SPRING	Air		Coil w/P		
WHEEL SIZE	16" 20" 26"				
TRAVEL	50/80/100/120mm				
BRAKE TYPE	Disc Brake				

A Air
P Preload Adjuster
RL Remote Lock-out
TNL Hydraulic Lock-out
ML Mechanical Lock-out

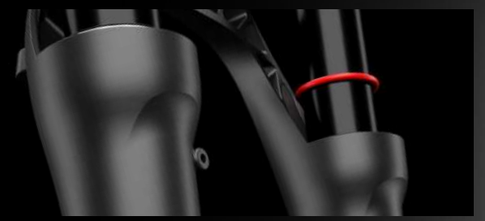

ALSTON

雪地车前叉，铝合金外管+锻造铝肩适配4.0轮胖胎，减震性能优异；选配气叉/弹簧叉，气叉配直径34，轻量化航空级铝内管，弹簧叉配高碳钢34内管；油压/弹簧减震/机械/线控4款选配。

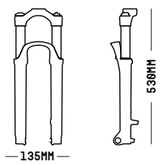

MODEL	ALSTON				
	A-TNL	A-RL	ML-P	TNL-P	P
STEERER	Aluminium/Steel Ø30(39.8)*28.6				
CROWN PITCH	P171mm				
CROWN	Aluminium				
STANCHION	Aluminium-Ø34mm hard Anodize		Steel-Ø34mm CP/QPQ		
CASTING	Aluminium Open dropout 135*Ø9.8mm				
SPRING	Air		Coil w/P		
WHEEL SIZE	20" 24" 26"				
TRAVEL	80/100/120mm				
BRAKE TYPE	Disc Brake				

A Air
P Preload Adjuster

RL Remote Lock-out
TNL Hydraulic Lock-out
ML Mechanical Lock-out

FATBIKE

STRIDE

适合高性能山地车，铝合金外腿结合锻造铝肩，直径30高碳钢内管 ，可选功能齐全；配3.0轮胎，开档110-开口，可做高配铝合金内管，做32铝内管气叉。

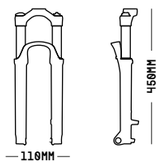

MODEL	STRIDE		
	ML-P	TNL-P	RL-P
STEERER	Aluminium/Steel Ø30*28.6		
CROWN PITCH	P140mm		
CROWN	Aluminium		
STANCHION	Steel-Ø30/32mm CP/ED/QPQ		
CASTING	Magnesium open dropout 110*Ø9.8mm		
SPRING	Coil w/P		
WHEEL SIZE	20"		
TRAVEL	90mm		
BRAKE TYPE	Disc Brake		

P Preload Adjuster

RL Remote Lock-out
TNL Hydraulic Lock-out
ML Mechanical Lock-out

ALSTON-15

雪地车前叉，铝合金外管+锻造铝肩+4.0轮胖胎，减震性能好；选配气叉/弹簧叉，气叉配直径34，轻量化航空级铝内管，弹簧叉配高碳钢34内管；选配油压/弹簧减震。

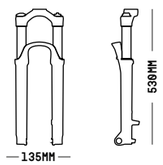

MODEL	ALSTON-15				
	A-TNL	A-RL	ML-P	TNL-P	P
STEERER	Aluminium/Steel Ø30(39.8)*28.6				
CROWN PITCH	P171mm				
CROWN	Aluminium				
STANCHION	Aluminium-Ø34mm hard Anodize		Steel-Ø34mm CP/QPQ		
CASTING	Aluminium 135*Ø15mm Thru Axle				
SPRING	Air		Coil w/P		
WHEEL SIZE	20" 24" 26"				
TRAVEL	80/100/120mm				
BRAKE TYPE	Disc Brake				

A Air
P Preload Adjuster

RL Remote Lock-out
TNL Hydraulic Lock-out
ML Mechanical Lock-out

TARZAN

普叉，开档135，适配4.0雪地车轮胎；铝合金勾爪+铝肩；32高碳钢(内管与立管)；提供 20" 24" 26" 三款尺寸+柱式碟刹160mm。

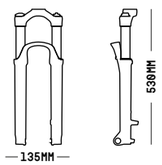

MODEL	TARZAN
STEERER	Steel Ø25.4*28.6
CROWN PITCH	P160mm
CROWN	Aluminium
STANCHION	Steel-Ø32mm CP/ED
CASTING	Aluminum open dropout 135*Ø9.8mm
SPRING	/
WHEEL SIZE	20" 24" 26"
TRAVEL	/
BRAKE TYPE	Disc Brake

EXPLORE

适用于机车山地越野和电助力山地车，倒叉双肩前叉，采用CNC加工托板，视觉效果好；高强度航空级铝合金叉腿，减震性能佳，路面状况反映灵敏；种类齐全，可定制化。

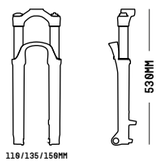

MODEL	EXPLORE					
	A-TNL	A-TNL-R	A-R	A-A	TNL-R	TNL
STEERER	Aluminium 7075 ϕ30*28.6					
CROWN PITCH	P145/171/185mm					
CROWN	Aluminium					
STANCHION	Aluminium-Ø34mm hard Anodize					
CASTING	Aluminium 110/135/150mm*ϕ15/20mm Thru Axle					
SPRING	Air				Coil	
WHEEL SIZE	20" 24" 26" 27.5" 29"					
TRAVEL	80/100/120/140/160mm					
BRAKE TYPE	Disc Brake					

A Air
R Rebound
TNL Hydraulic Lock-out

STRONG-DH

雪地车双肩前叉，锻造铝肩+4.0轮胖胎，减震性能优秀；选配气叉与弹簧叉，气叉配直径34，轻量化镁金外管与航空级铝内管，弹簧叉配高碳钢34内管；油压/弹簧减震均可选配。

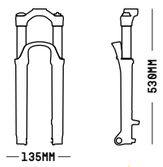

MODEL	STRONG-DH			
	A-TNL	A-R	TNL-P	P
STEERER	Aluminium/Steel ϕ30*28.6			
CROWN PITCH	P171mm			
CROWN	Aluminium			
STANCHION	Aluminium-Ø34mm hard Anodize		Steel-Ø34mm CP/QPQ	
CASTING	Magnesium open dropout 135*Ø9.8mm		Aluminium open dropout 135*Ø9.8mm	
SPRING	Air		Coil w/P	
WHEEL SIZE	20" 26"			
TRAVEL	120/140mm			
BRAKE TYPE	Disc Brake			

A Air
R Rebound
P Preload Adjuster
TNL Hydraulic Lock-out

ALSTON-DH

雪地车双肩前叉，铝合金外管搭配4.0轮胖胎，减震性能绝佳；选配气叉与弹簧叉，气叉为直径34，轻量化航空级铝内管，弹簧叉配高碳钢34内管；选配油压/弹簧减震，前叉规格20"/24"/26"。

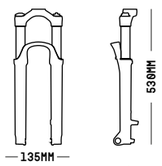

MODEL	ALSTON-DH			
	A-TNL	A-R	TNL-P	P
STEERER	Aluminium/Steel ϕ30*28.6			
CROWN PITCH	P171mm			
CROWN	Aluminium			
STANCHION	Aluminium-Ø34mm hard Anodize		Steel-Ø34mm CP/QPQ	
CASTING	Aluminium open dropout 135*Ø9.8mm Aluminium 135*Ø15mm Thru Axle			
SPRING	Air		Coil w/P	
WHEEL SIZE	20" 24" 26"			
TRAVEL	100/120/140mm			
BRAKE TYPE	Disc Brake			

A Air
R Rebound
P Preload Adjuster
TNL Hydraulic Lock-out

COWBOY

倒叉前叉，航空级铝合金叉腿（40），高强度，直径32航空级铝内管，带来超佳减震性能，对路面状况反映灵敏；16" 20" 24" 26"四种尺寸，开档110/135，开口轴芯，弹簧叉，可满足定制化需求。

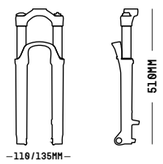

MODEL	COWBOY
STEERER	Steel ϕ25.4*28.6
CROWN PITCH	P145/165mm
CROWN	Aluminium
STANCHION	Steel-ϕ32mm CP/ED
CASTING	Aluminium Open dropout 110/135*10mm
SPRING	Coil
WHEEL SIZE	16" 20" 24" 26"
TRAVEL	35/50/80mm
BRAKE TYPE	Disc Brake

DOWNHILL

享受冲坡的刺激与快乐

若没有舒适度和安全性的保障

那就是噩梦

而现在有了ARES-DH的陪伴

那就放心大胆地一往直前吧

一冲到底的劲爽

亲自试过才更精彩！

高端山地车双肩前叉，山地车玩家的首选；配2.8宽胎，内管36铝合金内管，行程160，速降系列，空气弹簧，产品轻量化，镁合金外管，110-15桶轴，骑行更安全，27.5+与29+两个规格，轴承式滑套，前叉作动更顺畅。

EXHO
DEFEAT THE SHOCKS

ARES-DH

适用于电助车和高性能山地车下坡车，镁合金外腿+锻造铝双肩；高强度轻量化36航空级铝内管，轴承式滑套，为内管顺畅度加分；新升级气压避震系统+配2.8轮胎，轻松自如应对各种复杂路况，易维护。

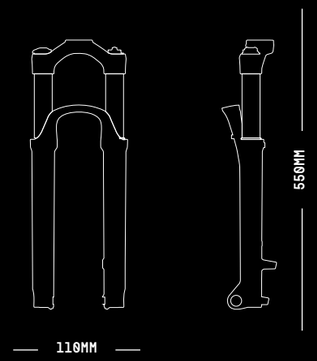

MODEL	ARES-DH	
	A-TNL	A-R
STEERER	Aluminium 7075, Φ30*28.6	
CROWN PITCH	P145mm	
CROWN	Aluminium	
STANCHION	Aluminium-Φ36mm hard Anodize	
CASTING	Magnesium 110*Φ15mm Thru Axle	
SPRING	Air	
WHEEL SIZE	27.5+" 29+"	
TRAVEL	100/120/140/160mm	
BRAKE TYPE	Disc Brake (160mm-180mm)	

A Air
R Rebound
TNL Hydraulic Lock-out

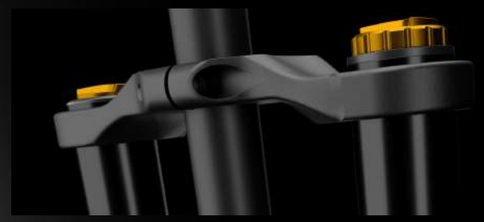

CASTOS-DH

适合休闲轻量版高性能山地车，镁合金外腿+锻造铝双肩；高强度轻量化32航空级铝内管，轴承式滑套，提升内管顺畅度；新升级气压避震系统搭配2.1轮胎,开档100，行程120。

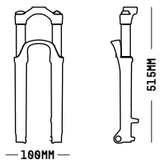

MODEL	CASTOS-DH	
	A-TNL	A-R
STEERER	Aluminium 7075/Steel Φ30*28.6	
CROWN PITCH	P130mm	
CROWN	Aluminium	
STANCHION	Aluminium-Φ32mm hard Anodize	
CASTING	Magnesium open dropout 100*Φ9.8mm	
SPRING	Air	
WHEEL SIZE	27.5" 29"	
TRAVEL	120/140mm	
BRAKE TYPE	Disc Brake	

A Air
P Preload Adjuster
TNL Hydraulic Lock-out

CASTOS-15DH

适合休闲轻量版高性能山地车，镁合金外腿+锻造铝双肩；高强度轻量化32航空级铝内管，轴承式滑套，内管顺畅度UP；新升级的气压避震系统+2.1轮胎，100-15桶轴开档，行程120。

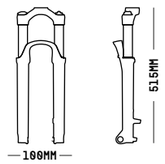

MODEL	CASTOS-15DH	
	A-TNL	A-R
STEERER	Aluminium Φ30*28.6	
CROWN PITCH	P130mm	
CROWN	Aluminium	
STANCHION	Aluminium-Φ32mm hard Anodize	
CASTING	Magnesium 100*Φ15mm Thru Axle	
SPRING	Air	
WHEEL SIZE	27.5" 29"	
TRAVEL	120/140mm	
BRAKE TYPE	Disc Brake	

A Air
P Preload Adjuster
TNL Hydraulic Lock-out

URBAN

在结束一周高强度工作后

最喜欢的莫过于牵一台休闲车

走过城市的角角落落

藏在巷子深处的咖啡馆

每周都有令人沉迷的新品瓷器店

还保留小时候味道的小吃店……

朋友、同事诧异于我对城市的熟悉度

他们不知道的是我有秘密武器

走路太慢，开车太快

骑车才能触摸隐藏在繁华都市的烟火气

配备了EXSHO RAY-630前叉的休闲车

让我在城市穿越时毫无顾虑

无论是颠簸的石板路

还是年久失修的巷子坑洼地

总能让我气定神闲、悠然而过

想不想也去探寻你城市的秘密？

EXSHO
DEFEAT THE SHOCKS

URBAN

RAY-650

休闲运动城市车前叉RAY-650，铝合金外管+锻造铝肩，直径30高碳钢内管，弹簧叉，中心距116，整体强度更好；前叉外管内空间充足，外胎较粗，胎轮与地面接触面积较大，摩擦力更足，可适应较复杂路况。功能选配：机械锁死/油压锁死/线控锁死，锁死结构操作性更便捷。

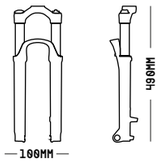

MODEL	RAY-650		
	P	ML-P	TNL-P
STEERER	Steel Φ25.4*28.6		
CROWN PITCH	P116mm		
CROWN	Aluminium		
STANCHION	Steel-Φ30mm CP/ED		
CASTING	Aluminium open dropout 100*Φ9.8mm		
SPRING	Coil w/P		
WHEEL SIZE	700 C		
TRAVEL	50/80mm		
BRAKE TYPE	Disc & V-brake		

P Coil Preload
ML Mechanical Lock-out
TNL Hydraulic Lock-out

RAY-630

休闲运动城市车前叉RAY-630，铝合金外管+锻造铝肩，直径28.6高碳钢内管，弹簧叉，中心距107，可搭配700C轮胎，适合城市道路，功能选配弹簧可调与机械锁死。

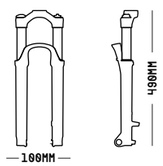

MODEL	RAY-630	
	P	ML-P
STEERER	Steel Φ25.4*28.6	
CROWN PITCH	P107mm	
CROWN	Aluminium	
STANCHION	Steel-Φ28.6mm CP/ED	
CASTING	Aluminium open dropout 100*Φ9.8mm	
SPRING	Coil w/P	
WHEEL SIZE	700 C	
TRAVEL	50/80mm	
BRAKE TYPE	Disc & V-brake	

P Coil Preload
ML Mechanical Lock-out

PRODUCT SPECIFICATION

MODEL	ARES	FIX	CASTOS	
	A-TNL A-TNL-R A-RL A -RL-R	A-TNL A-TNL-R A-RL A-RL-R	A-TNL A-TNL-R A-RL A-RL-R	ML-P TNL-P RL-P
STEERER	ϕ30*28.6*L mm 7075 Aluminium	ϕ39.8*28.6*L mm Aluminum	ϕ30*28.6*L mm Aluminium / Steel	
STEERER (STRAIGH/TAPER)	Option 1.5" Aluminium	-	Option 1.5" Aluminium / Steel	
CROWN	P145 Aluminium	P145mm Aluminium	P130mm Aluminium	
STANCHION	ϕ36mm 7075 Aluminium Hard anodize	ϕ34mm 7075 Aluminium Hard anodize	ϕ32mm 7075 Aluminum / Steel Hard anodize / QPQ / CP / ED	
LOWER	Magnsium alloy 15*110 mm Thru Axle	Magnsium alloy 15*110 mm Thru Axle	Magnsium alloy 10*100 mm Open dropout (Optional 15*100 mm Thru Axle)	
FEATURE	Air Spring Hydraulic Lock-out Air Spring Hydraulic Lock-out Rebound Air Spring Remote Lock-out Air Spring Remote Lock-out Rebound	Air Spring Hydraulic Lock-out Air Spring Hydraulic Lock-out Rebound Air Spring Remote Lock-out Air Spring Remote Lock-out Rebound	Air Spring Hydraulic Lock-out Air Spring Hydraulic Lock-out Rebound Air Spring Remote Lock-out Air Spring Remote Lock-out Rebound	Coil Spring Mechanical Lock-out Preload Adjuster Coil Spring Hydraulic Lock-out Preload Adjuster Coil Spring Remote Lock-out Preload Adjuster
DAMPER	Hydraulic Cartridge	Hydraulic Cartridge	Hydraulic Cartridge	
SPRING	Air	Air	Air	Coil
TRAVEL	100/120/140/160mm	80/100mm	100/120mm	
BRAKE TYPE	Disc only	Disc only	Disc only	
DISC BRAKE MOUNT	Post	Post	Post	
RECOMMENDED MAX ROTER SIZE(MM)	180	160	160	
DYNAMD BRAKET MOUNT	-	-	-	
CABLE GUIDE FOR HUB DYNAMD	-	-	-	
ROLLER BRAKE MOUNT	-	-	-	
WHEEL SIZE	27.5+" 29+"	20" 24"	27.5" 29"	
RECOMMENDED MAX TIRE WIDTH(MM)	71(2.8 inch)	78(3.0 inch)	61(2.1 inch)	
ORIGIN OF PRODUCTION	CHINA	CHINA	CHINA	
NOTE	-	-	-	

PRODUCT SPECIFICATION

MODEL	CASTOS-15		RISE
	A-TNL A-TNL-R A-RL A-RL-R	ML-P TNL-P RL-P	A-TNL A-TNL-R A-RL A-RL-R
STEERER	ϕ30*28.6*L mm Aluminium / Steel		ϕ30*28.6*L mm Aluminium / Steel
STEERER (STRAIGH/TAPER)	Option 1.5" Aluminum / Steel		Option 1.5" Aluminum / Steel
CROWN	P130mm Aluminium		P130mm Aluminium
STANCHION	ϕ32mm 7075 Aluminum / Steel Hard anodize / QPQ / CP / ED		ϕ34mm 7075 Aluminum / Steel Hard anodize
LOWER	Magnsium alloy 15*100 mm Thru Axle (Optional 10*100 mm Open dropout)		Magnsium alloy 10*100 mm Open dropout
FEATURE	Air Spring Hydraulic Lock-out Air Spring Hydraulic Lock-out Rebound Air Spring Remote Lock-out Air Spring Remote Lock-out Rebound	Coil Spring Mechanical Lock-out Preload Adjuster Coil Spring Hydraulic Lock-out Preload Adjuster Coil Spring Remote Lock-out Preload Adjuster	Air Spring Hydraulic Lock-out Air Spring Hydraulic Lock-out Rebound Air Spring Remote Lock-out Air Spring Remote Lock-out Rebound
DAMPER	Hydraulic Cartridge		Hydraulic Cartridge
SPRING	Air	Coil	Air
TRAVEL	100/120mm		100/120mm
BRAKE TYPE	Disc only		Disc only
DISC BRAKE MOUNT	Post		Post
RECOMMENDED MAX ROTER SIZE(MM)	160		160
DYNAMD BRAKET MOUNT	-		-
CABLE GUIDE FOR HUB DYNAMD	-		-
ROLLER BRAKE MOUNT	-		-
WHEEL SIZE	27.5" 29"		27.5" 29"
RECOMMENDED MAX TIRE WIDTH(MM)	61(2.1 inch)		61(2.1 inch)
ORIGIN OF PRODUCTION	CHINA		CHINA
NOTE	-		-

PRODUCT SPECIFICATION

MODEL	ZEUS		DASH	
	A-TNL A-TNL-R A-RL A-RL-R	ML-P TNL-P RL-P	A-TNL A-TNL-R A-R A-A	TNL-R TNL
STEERER	ϕ30*28.6*L mm Aluminium / Steel		ϕ30*28.6*L mm 7075 Aluminium	
STEERER (STRAIGH/TAPER)	Option 1.5" Aluminium / Steel		-	
CROWN	P130mm Aluminium		P145/171/185mm Aluminium	
STANCHION	ϕ32mm 7050 Aluminium Hard anodize	ϕ32mm Steel CP / QPQ Hard anodize	ϕ34mm 7050 Aluminium Hard anodize	
LOWER	Magnsium alloy 10*100 mm Open Dropout		ϕ42 Aluminium Hard anodize Black Optional 110/135/150mm* ϕ15/20mm Thru Axle	
FEATURE	Air Spring Hydraulic Lock-out Air Spring Hydraulic Lock-out Rebound Air Spring Remote Lock-out Air Spring Remote Lock-out Rebound	Coil Spring Mechanical Lock-out Preload Adjuster Coil Spring Hydraulic Lock-out Preload Adjuster Coil Spring Remote Lock-out Preload Adjuster	Air Spring Hydraulic Lock-out Air Spring Hydraulic Lock-out Rebound Air Spring Rebound Double Air Spring	Coil Spring Hydraulic Lock-out Rebound Coil Spring Hydraulic Lock-out
DAMPER	Hydraulic Cartridge		Hydraulic Cartridge	
SPRING	Air	Coil	Air	Coil
TRAVEL	100/120mm		80/100/120/140/160mm	
BRAKE TYPE	Disc only		Disc only	
DISC BRAKE MOUNT	Post		Post	
RECOMMENDED MAX ROTER SIZE(MM)	180		160	
DYNAMD BRAKET MOUNT	-		-	
CABLE GUIDE FOR HUB DYNAMD	-		-	
ROLLER BRAKE MOUNT	-		-	
WHEEL SIZE	26" 27.5" 29"		20" 24" 26" 27.5" 29"	
RECOMMENDED MAX TIRE WIDTH(MM)	61(2.1 inch)		(3.0/4.0/5.0 inch)	
ORIGIN OF PRODUCTION	CHINA		CHINA	
NOTE	-		-	

PRODUCT SPECIFICATION

MODEL	STRONG		ALSTON			ALSTON-15	
	A-TNL A-RL	ML-P TNL-P P	A-TNL A-RL	ML-P TNL-P P		A-TNL A-RL	ML-P TNL-P P
STEERER	ϕ30*28.6*L mm Aluminium / Steel		ϕ30*28.6*L mm 7075 Aluminium / Steel			ϕ30*28.6*L mm 7075 Aluminium / Steel	
STEERER (STRAIGH/TAPER)	Option 1.5" Aluminum / Steel		Option 1.5" Aluminium / Steel			Option 1.5" Aluminium / Steel	
CROWN	P171mm Aluminium		P171 Aluminium			P171 Aluminium	
STANCHION	ϕ34mm 7075 Aluminium / Steel Hard anodize QPQ / CP / ED		ϕ34mm 7075 Aluminium / Steel Hard anodize / QPQ / CP / ED			ϕ34mm 7075 Aluminium / Steel Hard anodize / QPQ / CP / ED	
LOWER	Magnsium alloy 10*135 mm Open dropout		Aluminium alloy 10*135 mm Open dropout (Optional 15*135 mm Thru Axle)			Aluminium alloy 15*135 mm Thru Axle (Optional 10*135 mm Open dropout)	
FEATURE	Air Spring Hydraulic Lock-out Air Spring Remote Lock-out	Coil Spring Mechanical Lock-out Preload Adjuster Coil Spring Hydraulic Lock-out Preload Adjuster Coil Spring Preload Adjuster	Air Spring Hydraulic Lock-out Air Spring Remote Lock-out	Coil Spring Mechanical Lock-out Preload Adjuster Coil Spring Hydraulic Lock-out Preload Adjuster	Coil Spring Preload Adjuster	Air Spring Hydraulic Lock-out Air Spring Remote Lock-out	Coil Spring Mechanical Lock-out Preload Adjuster Coil Spring Hydraulic Lock-out Preload Adjuster Coil Spring Preload Adjuster
DAMPER	Hydraulic Cartridge		Hydraulic Cartridge		-	Hydraulic Cartridge	
SPRING	Air	Coil	Air	Coil		Air	Coil
TRAVEL	50/80/100/120mm		80/100/120mm			80/100/120mm	
BRAKE TYPE	Disc only		Disc only			Disc only	
DISC BRAKE MOUNT	Post		Post			Post	
RECOMMENDED MAX ROTER SIZE(MM)	180		160			160	
DYNAMD BRAKET MOUNT	-		-			-	
CABLE GUIDE FOR HUB DYNAMD	-		-			-	
ROLLER BRAKE MOUNT	-		-			-	
WHEEL SIZE	18" 20" 26 ′		20" 24" 26 ′			20" 24" 26 ′	
RECOMMENDED MAX TIRE WIDTH(MM)	102(4.0 inch)		102(4.0 inch)			61(2.1 inch)	
ORIGIN OF PRODUCTION	CHINA		CHINA			CHINA	
NOTE	-		-			-	

PRODUCT SPECIFICATION

MODEL	STRIDE		TARZAN	EXPLORE	
	ML-P	TNL-P RL-P	_	A-TNL A-TNL-R A-R A-A	TNL-R TNL
STEERER	ϕ30*28.6*L mm 7075 Aluminium / Steel		ϕ30.8*28.6*L mm Aluminium / Steel	ϕ30*28.6*L mm Aluminium	
STEERER (STRAIGH/TAPER)	-		-	-	
CROWN	P140 Aluminium		P160mm Aluminium	P145/171/185mm Aluminium	
STANCHION	ϕ30mm Steel QPQ / CP / ED		ϕ32mm Steel QPQ / CP	ϕ34mm 7075 Aluminium Hard anodize	
LOWER	Magnsium alloy 10*110 mm Open dropout		Magnsium alloy 9.8*135 mmOpen dropout	ϕ42mm Aluminium Hard anodize Optional 110/135/150mm* ϕ15/20mm Thru Axle	
FEATURE	Coil Spring Mechanical Lock-out Preload Adjuster	Coil Spring Hydraulic Lock-out Preload Adjuster / Coil Spring Remote Lock-out Preload Adjuster	-	Air Spring Hydraulic Lock-out / Air Spring Hydraulic Lock-out Rebound / Air Spring Rebound / Double Air Spring	Coil Spring Hydraulic Lock-out Rebound / Coil Spring Hydraulic Lock-out
DAMPER	-	Hydraulic Cartridge	-	Hydraulic Cartridge	
SPRING	Coil		-	Air	Coil
TRAVEL	90mm		-	80/100/120/140/160mm	
BRAKE TYPE	Disc		Disc	Disc only	
DISC BRAKE MOUNT	Post		Post	Post	
RECOMMENDED MAX ROTER SIZE(MM)	160		160	160	
DYNAMD BRAKET MOUNT	-		-	-	
CABLE GUIDE FOR HUB DYNAMD	-		-	-	
ROLLER BRAKE MOUNT	-		-	-	
WHEEL SIZE	20"		20" 24" 26"	20" 24" 26" 27.5" 29"	
RECOMMENDED MAX TIRE WIDTH(MM)	71((3.0 inch)		102(4.0 inch)	(3.0/4.0/5.0 inch)	
ORIGIN OF PRODUCTION	CHINA		CHINA	CHINA	
NOTE	-		-	-	

PRODUCT SPECIFICATION

MODEL	ALSTON-DH		STRONG-DH		COWBOY	ARES-DH	
	A-TNL A-R	TNL-P P	A-TNL A-R	TNL-P P	_	A-TNL	A-R
STEERER	ϕ30*28.6*L mm Aluminium / Steel		ϕ30*28.6*L mm Aluminium / Steel		ϕ30*28.6*L mm Aluminium / Steel	ϕ30*28.6*L mm Aluminium	
STEERER (STRAIGH/TAPER)	-		-		-	-	
CROWN	P171mm Aluminium		P171mm Aluminium		P145/165mm Aluminium	P145mm Aluminium	
STANCHION	ϕ34mm 7075 Aluminum / Steel Hard anodize QPQ / CP / ED		ϕ34mm 7075 Aluminium Hard anodize	ϕ34mm 7075 Steel CP / QPQ	ϕ32mm 7075 Aluminium / Steel Hard anodize QPQ / CP / ED	ϕ34mm 7075 Aluminum Hard anodize	
LOWER	Aluminium alloy 10*135 mm Open dropout (Optional 15*135mm Thru Axle)		Magnsium alloy 10*135 mm Open dropout		Aluminium 110/135*10 mm Open dropout	Magnsium alloy 15*110 mm Thru Axle	
FEATURE	Air Spring Hydraulic Lock-out / Air Spring Rebound	Coil Spring Hydraulic Lock-out Preload Adjuster / Coil Spring Preload Adjuster	Air Spring Hydraulic Lock-out / Air Spring Rebound	Coil Spring Hydraulic Lock-out Preload Adjuster / Coil Spring Preload Adjuster	-	Air Spring Hydraulic Lock-out	Air Spring Rebound
DAMPER	Hydraulic Cartridge	-	Hydraulic Cartridge	-	-	Hydraulic Cartridge	
SPRING	Air	Coil	Air	Coil	Coil	Air	
TRAVEL	100/120/140mm		120/140mm		30/50*80mm	100/120/140/160mm	
BRAKE TYPE	Disc only		Disc only		Disc	Disc only	
DISC BRAKE MOUNT	Post		Post		Post	Post	
RECOMMENDED MAX ROTER SIZE(MM)	160		160		160	180	
DYNAMD BRAKET MOUNT	-		-		-	-	
CABLE GUIDE FOR HUB DYNAMD	-		-		-	-	
ROLLER BRAKE MOUNT	-		-		-	-	
WHEEL SIZE	20" 24" 26"		20" 26"		16" 20" 24" 26"	27.5"+ 29"+	
RECOMMENDED MAX TIRE WIDTH(MM)	102(4 inch)		102(4.0 inch)		3.0/4.0/5.0 inch	71(2.8 inch)	
ORIGIN OF PRODUCTION	CHINA		CHINA		CHINA	CHINA	
NOTE	-		-		-	-	

PRODUCT SPECIFICATION

MODEL	CASTOS-DH		CASTOS-15DH		RAY-650			RAY-630	
	A-TNL	A-R	A-TNL	A-R	P ML-P		TNL-P	P	ML-P
STEERER	ϕ30*28.6*L mm 7075 Aluminium		ϕ30*28.6*L mm 7075 Aluminium		ϕ30*28.6*L mm 7075 Aluminium / Steel			ϕ30*28.6*L mm 7075 Aluminium / Steel	
STEERER (STRAIGH/TAPER)	-		-		-			-	
CROWN	P130 Aluminium		P130 Aluminium		P116 Aluminium			P107 Aluminium	
STANCHION	ϕ32mm 7075 Aluminium Hard anodize		ϕ32mm 7075 Aluminium Hard anodize		ϕ30mm Steel QPQ / CP / ED			ϕ28.6mm Steel QPQ / CP / ED	
LOWER	Magnsium alloy 10*100 mm Open dropout (Optional 15*100 mm Thru Axle)		Magnsium alloy 15*100 mm Thru Axle (Optional 10*100 mm Open dropout)		Aluminium alloy 10*100 mm Open dropout			Aluminium alloy 10*100 mm Open dropout	
FEATURE	Air Spring Hydraulic Lock-out	Air Spring Rebound	Air Spring Hydraulic Lock-out	Air Spring Rebound	Coil Spring Preload Adjuster	Coil Spring Mechanical Lock-out Preload Adjuster	Coil Spring Hydraulic Lock-out Preload Adjuster	Coil Spring Preload Adjuster	Coil Spring Mechanical Lock-out Preload Adjuster
DAMPER	Hydraulic Cartridge		Hydraulic Cartridge		-		Hydraulic Cartridge	-	
SPRING	Air		Air		Coil			Coil	
TRAVEL	120/140mm		120/140mm		100/120mm			100/120mm	
BRAKE TYPE	Disc only		Disc only		Disc & V-brake			Disc & V-brake	
DISC BRAKE MOUNT	Post		Post		Post			Post	
RECOMMENDED MAX ROTER SIZE(MM)	160		160		160			160	
DYNAMD BRAKET MOUNT	-		-		-			-	
CABLE GUIDE FOR HUB DYNAMD	-		-		-			-	
ROLLER BRAKE MOUNT	-		-		-			-	
WHEEL SIZE	27.5" 29"		27.5" 29"		700C			700C	
RECOMMENDED MAX TIRE WIDTH(MM)	61(2.1 inch)		61(2.1 inch)		51(2.0 inch)			51(2.0 inch)	
ORIGIN OF PRODUCTION	CHINA		CHINA		CHINA			CHINA	
NOTE	-		-		-			-	

DEFEAT THE SHOCKS

广州科美运动科技有限公司
地址:广州市花都区炭步镇花都大道西23号
电话:15281776700
邮箱:zwk@exshoshock.com

易硕运动科技(昆山)有限公司
地址:江苏省昆山市开发区澄湖路58号7号楼2楼
电话:0512-57861198
邮箱:exsho@exshoshock.com

www.exshoshock.com